Product Data Sheet	G12AF Type 2 Valve Manifold

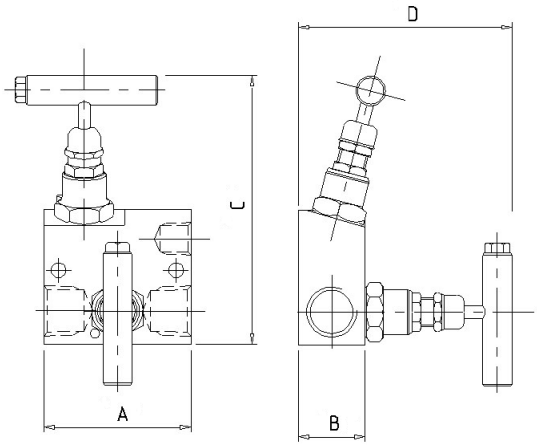

The ‘G12AF’ Type 2 valve manifold is designed for remote mounting to static pressure transmitters. The angled heads allow for panel mounting. The separate vent valve gives full control of venting of the instrument, plus the ability to calibrate in-situ. Each needle valve head is designed for safe and reliable isolation, giving bubble tight shut off, with non-rotating & anti-galling tip and dynamic self-adjusting spindle seal to give long service life in a variety of service conditions.

Part No.	Connections Size	A	B	C	D	Weight (Kgs)
G12AF	½" F x F	2.5	1.1	4.6	3.6	1.0

Key Features of the Oliver Needle Valve range

- Non rotating tip - self centering & anti-galling
- Piston ring - gives dynamic adjustment of gland seal in response to pressure change
- Anti-blow out spindle - a major safety feature
- Secure seal - precision machined to give leak free operation for the life of the valve. Available in either PTFE or graphite foil

Standard Specification

Pressure: 6000psi	Packing: PTFE	Handle: T-Bar	Bore: 0.21” (5.4mm)
Temp: 240 deg C	Thread form: NPT	Seat: Metal to metal	CV: 0.46
2 x 9/32” diameter mounting holes included		1/2” Inlet / Outlet Connections	
1/4” NPT Vent Connection			

Ordering Code

(Typical example) →	G12AF		S	/	BT	/	AT

Type

G12AF - Female x Female

Material

S - 316S31 Stainless Steel
M - Monel (400)
HC - Hastalloy (C276)
(Others available)

Optional Connections (NPT Standard)

BT - BSP Taper
BP - BSP Parallel (top sealing)
BTV - BSP Taper Vent
BPV - BSP Parallel Vent

Options

AG - Graphite Foil
AT - Anti-Tamper
BKTC - Carbon steel mounting bracket
BKTS - Stainless steel mounting bracket
HL - Handle Locking
HL-PI - Handle Locking + Position Indicator
HW - Hand Wheel
LT100 - Cryogenic Head Unit (-100°C)
MT - Metering Tip
NA - NACE MR-01-75 (latest revision)
OXY - Oxygen Cleaned
PK - PEEK Soft Tip
PP - Blank Plug In Vent Connection

Rev 1.2

Datasheet reproduced with the permission of Oliver Valves Ltd. Distributed by SAWYE.