Product Data Sheet	L Type Barstock DBB Valve Pipe to Pipe



Machined from a barstock body, this valve features two inline ball pattern primary and secondary isolating valves and a ball vent valve.

Ball valve bore size 10mm, 14mm or 20mm

Ideal for injection, sampling and double block and bleed for an instrument.

Key Features of the Oliver L Type Barstock DBB Valve Pipe to Pipe

- Compact barstock double block and bleed valve
- Anti-blowout spindle
- Reduced bore valve
- Each valve traceable by unique number
- Cam inter-lock option available

Standard Specification

- Maximum Pressure 6000psi
- Maximum Temperature 200℃
- Soft seated ball valve

General Arrangement Drawing

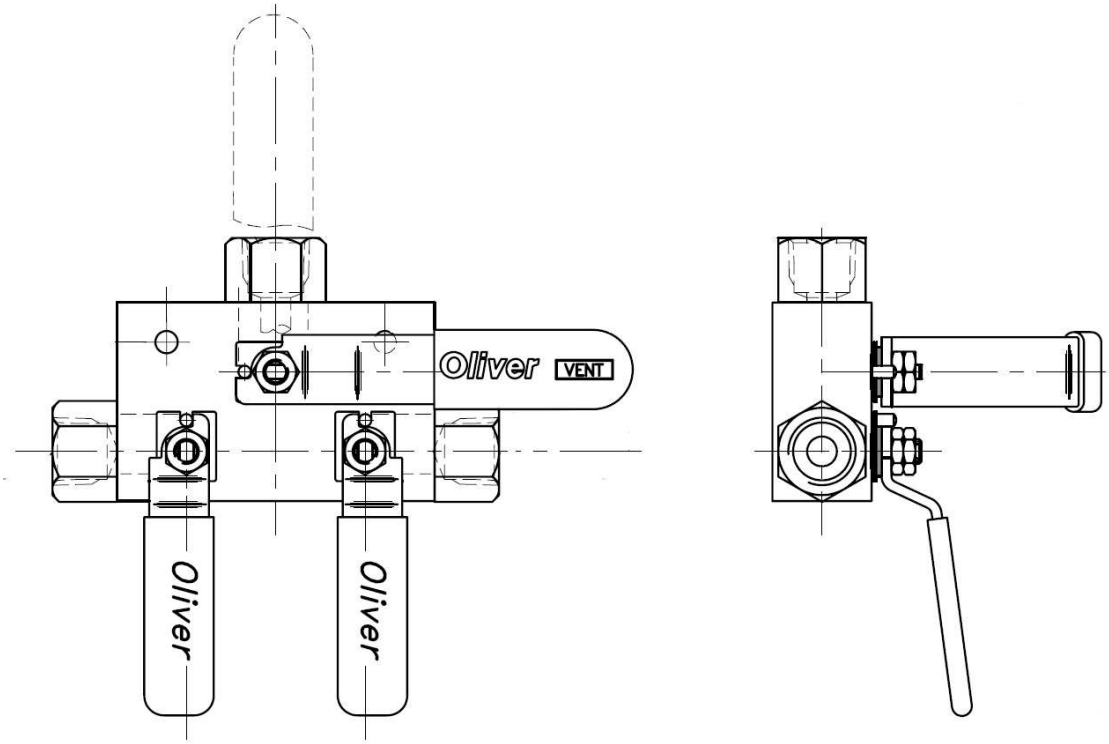

Datasheet reproduced with the permission of Oliver Valves Ltd. Distributed by SAWYE.

Ordering Code

(Typical example) →	DBB/L	/	S	/	X	/	50F/50F/50F	/	FS/HL/NA

Model / Type

Barstock, 3 ball in line pattern

Material

S – 316 Stainless steel BSEN 10088 1.4404
Other materials available on request

Bore

X – 10mm
Y – 14mm
Z – 20mm

Inlet / Instrument / Vent

Connection size
25 - ¼”
38 - ⅜”
50 - ½” (std process/instrument & vent)
75 - ¾”
10 – 1”
Process connection (NPT standard)
BP – BSP parallel pipe thread BS2779-1986
BT – BSP taper pipe thread BS21 - 1985
Connection type
F – Female thread (std instrument/vent)
M – Male thread

Options

PK – Peek seats
2H – 2 mounting holes
HL – Handle locking
Standard
NA – NACE MR-01-75 (latest revision) (EN1A carbon steel to NACE not available)
FS – Firesafe to API 607 and BS 6755 Part 2
10mm bore – PTFE/KEL-F seats (200℃ max)
14mm bore – Peek seats (240℃ max)
20mm bore – Peek seats (240℃ max)

Rev 1.1

Datasheet reproduced with the permission of Oliver Valves Ltd. Distributed by SAWYE.