Product Data Sheet	GM Type Needle Valve

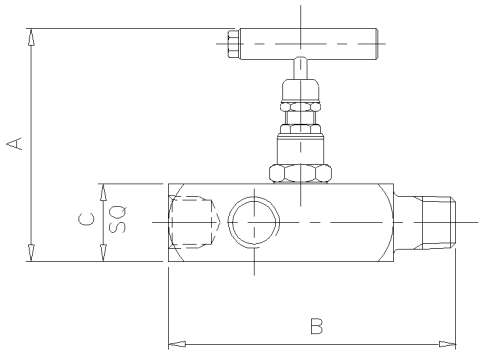

The ‘GM1’ Type Gauge Multiport Needle Valve is designed for safe and reliable isolation, giving bubble tight shut off, with non-rotating & anti-galling tip and dynamic self-adjusting spindle seal to give long service life in a variety of applications. The valve has three outlet connections for flexible instrument hook up plus the ability to calibrate the instrument in-situ.

Part No.	Connections Size	A	B	C	Weight (Kgs)
GM1	½"	3.8	4.6	1.3	0.7
GM1F	½"	3.8	3.3	1.3	0.7
GM175-50	¾" x ½"	3.8	4.6	1.3	0.7

Key Features of the Oliver Needle Valve range

- Non rotating tip - self centering & anti-galling
- Piston ring - gives dynamic adjustment of gland seal in response to pressure change
- Anti-blow out spindle - a major safety feature
- Secure seal - precision machined to give leak free operation for the life of the valve. Available in either PTFE or Grafoil

Standard Specification

Pressure: 6000psi	Packing: PTFE	Handle: T-Bar	Bore: 0.21” (5.4mm)
Temp: 240 deg C	Thread form: NPT	Seat: Metal to metal	CV: 0.46
1/2” Inlet / Outlet Connections		3 x Outlet Connections	

Ordering Code

(Typical example) →	GM1	S	/	BT	/	AT

Type

GM1 - Male x Female
GM1F - Female x Female
GM175-50 - Male x Female

Material

S - 316S31 Stainless Steel
M - Monel (400)
HC - Hastalloy (C276)
(Others available)

Optional Connections (NPT Standard)

BT - BSP Taper
BP - BSP Parallel (top sealing)
BW-SCH*** - Butt Weld (Schedule ***)

Options

AG - Grafoil
AT - Anti-Tamper
HL - Handle Locking
HL-PI - Handle Locking + Position Indicator
HW - Hand Wheel
LT100 - Cryogenic Head Unit (-100°C)
MT - Metering Tip
MTG - Mounting Holes x 2
NA - NACE MR-01-75 (latest revision)
OXY - Oxygen Cleaned
PK - PEEK Soft Tip (not available oxygen cleaned)
PP - Blank Plug In One Outlet
VP - Bleed Plug In One Outlet

Rev 1.1

Datasheet reproduced with the permission of Oliver Valves Ltd. Distributed by SAWYE.